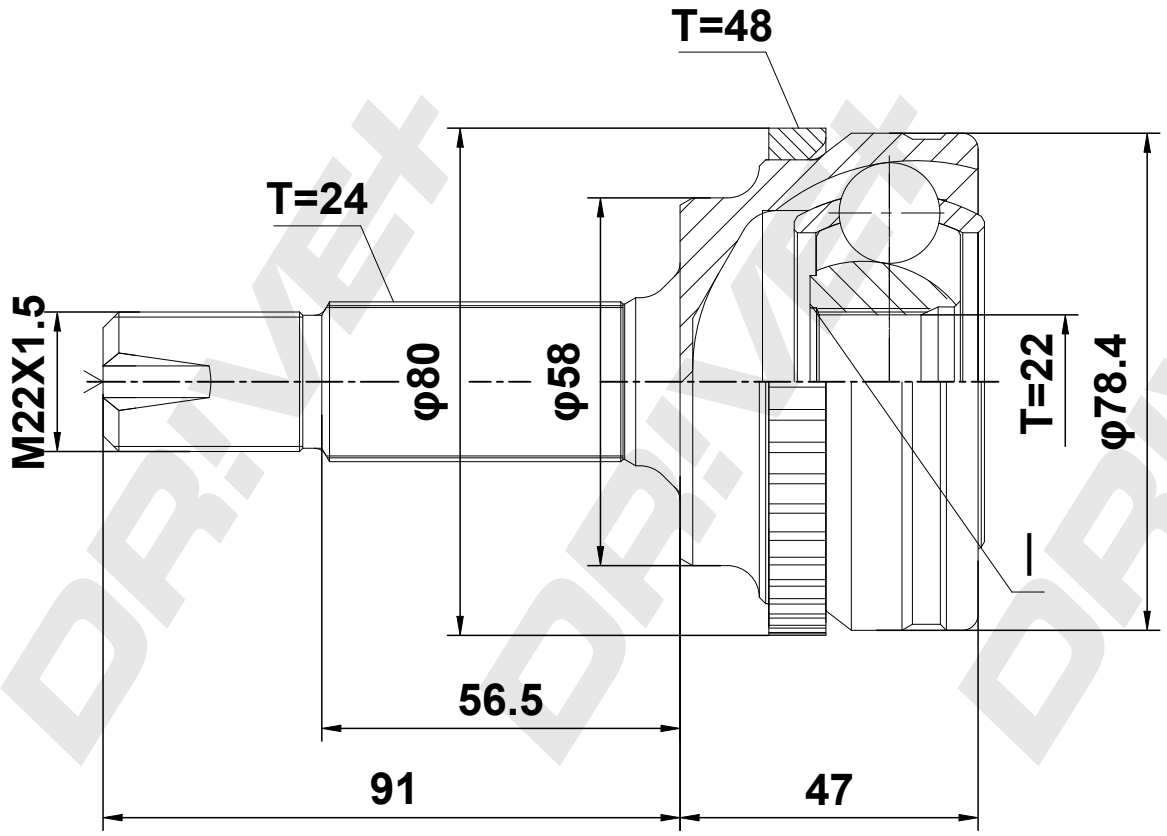

DP Number	Part Number	Drawing Version Number	Drawing Issue Date
DP2110.10.1594	DDC1594	V1	2025.11.10

DRIVE+