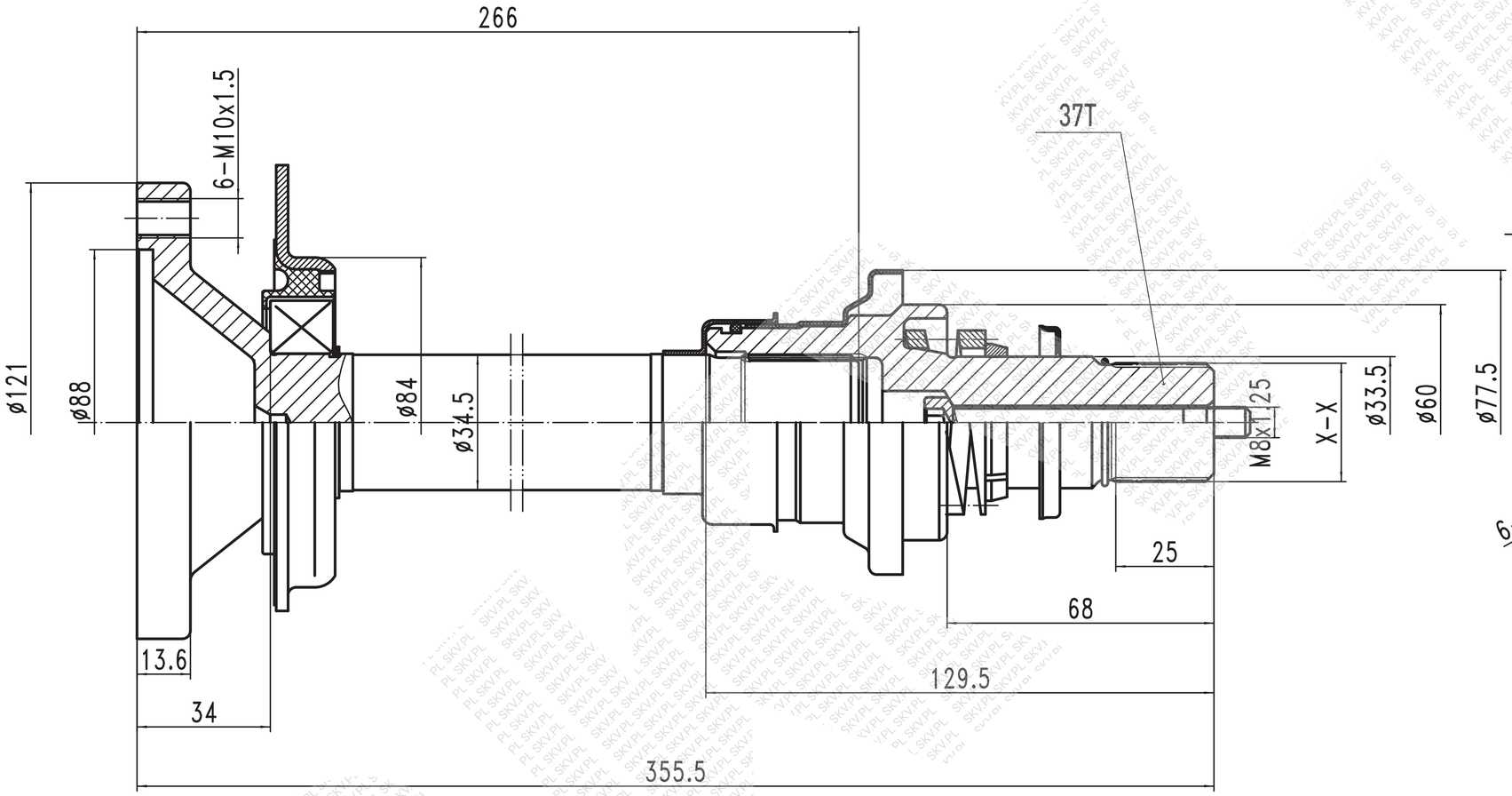

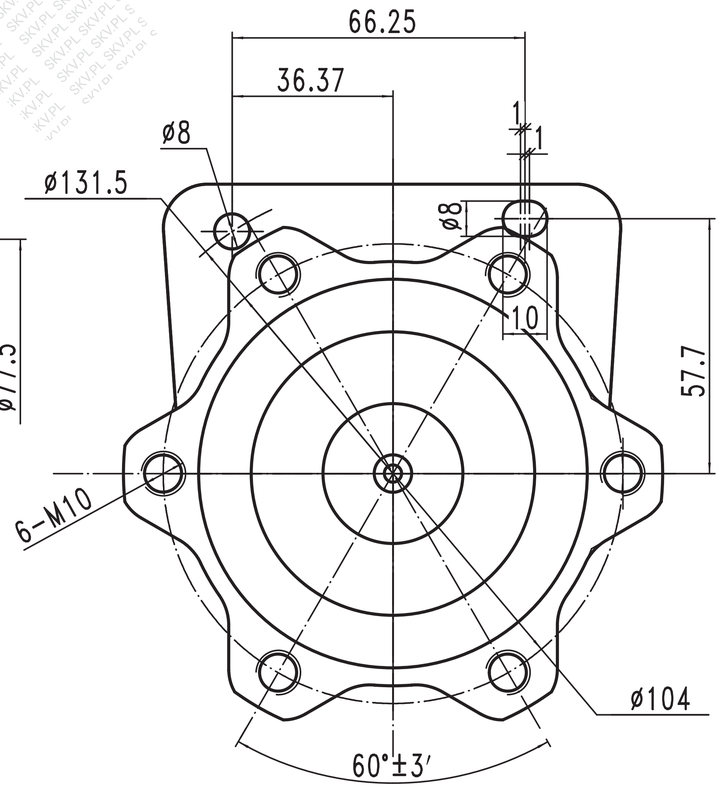

Importer	Product name		Symbol
ESEN Wojciech Michorzewski S.K.A. Papiezka 69, 87-800 Wloclawek, Poland info@skv.pl, www.skv.pl	DRIVESHAFT		40SKV008
	OE Number	Diagram No	Date
	02N409344E	001	01/2025