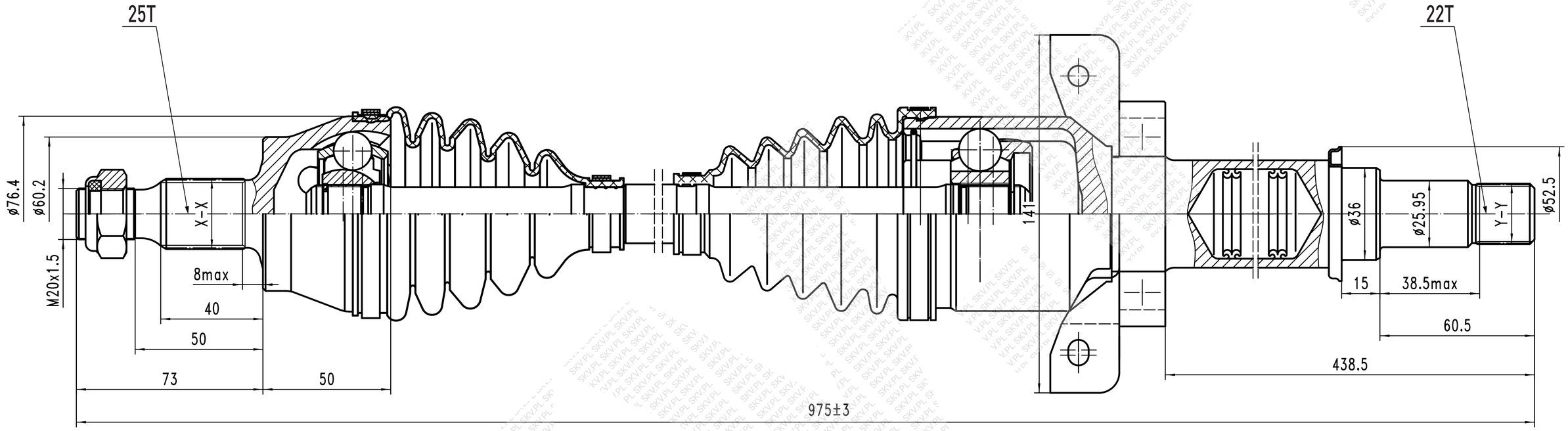

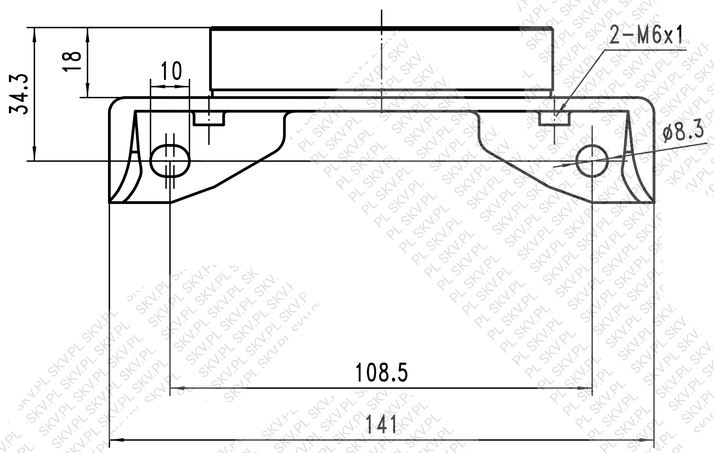

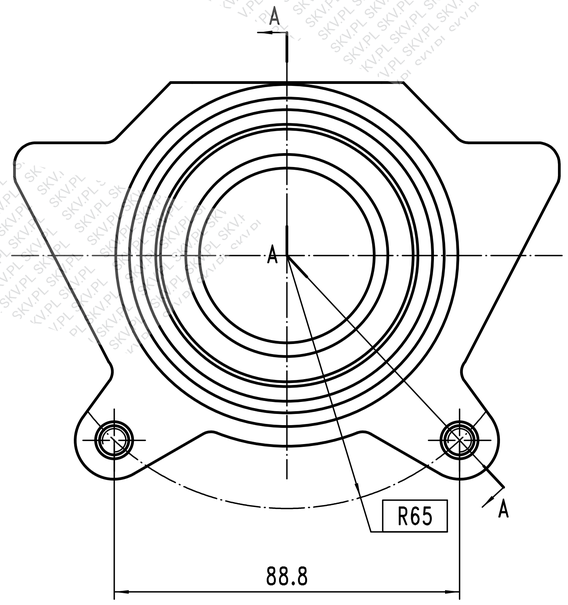

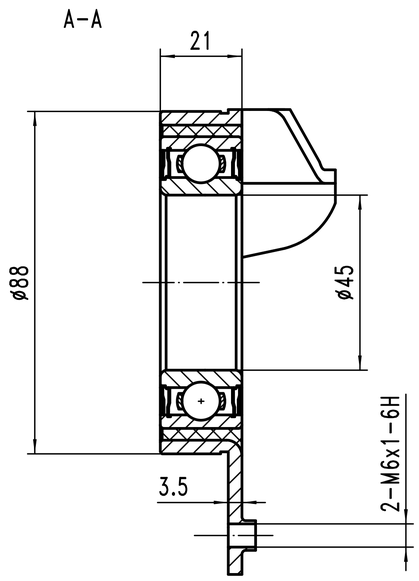

Importer	Product name		Symbol
ESEN Wojciech Michorzewski S.K.A. Papiezka 69, 87-800 Wloclawek, Poland info@skv.pl, www.skv.pl	DRIVESHAFT		40SKV136
	OE Number	Diagram No	Date
	1693601272	001	02/2025