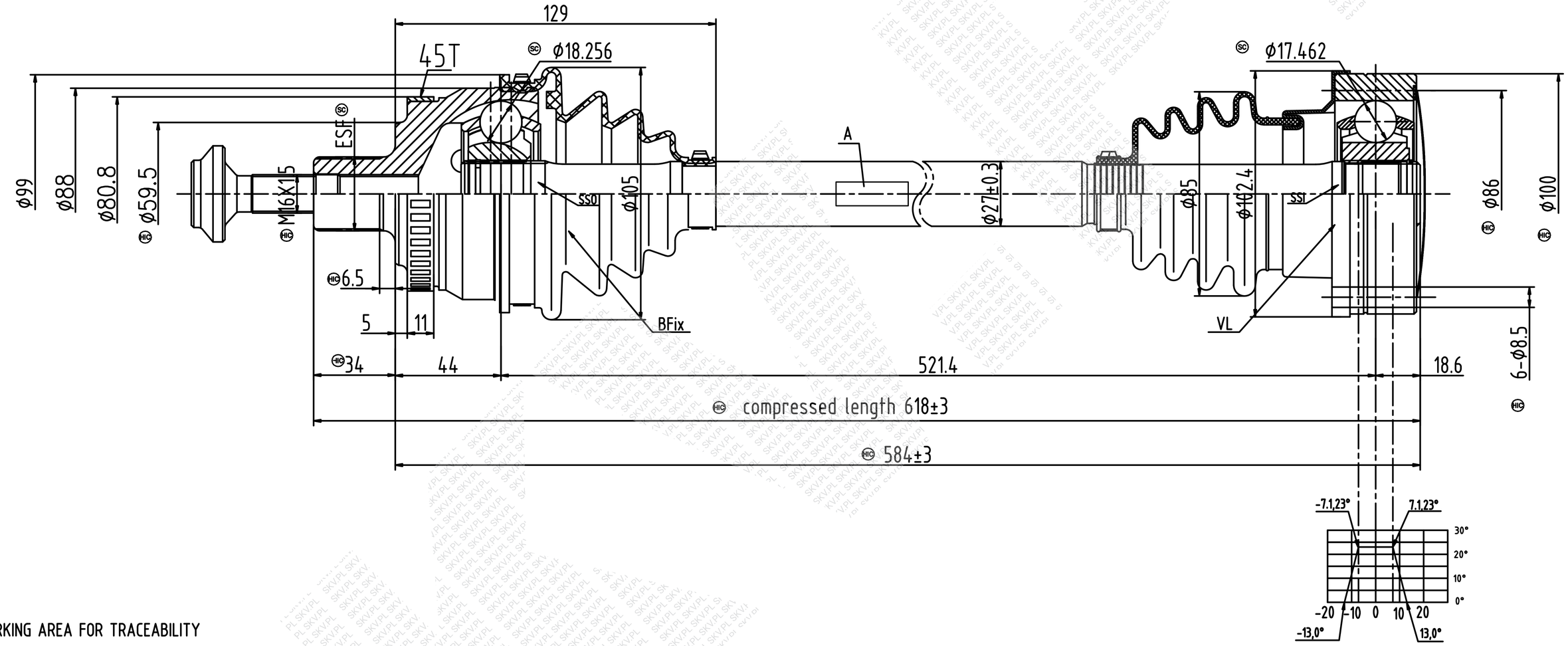

MARKING AREA FOR TRACEABILITY

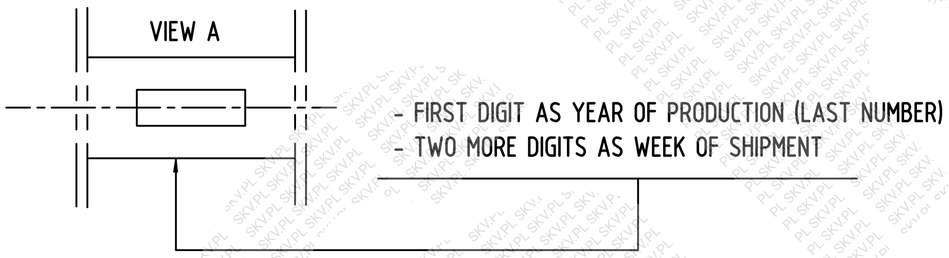

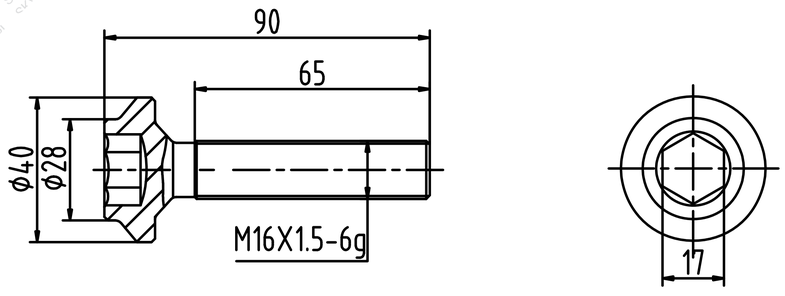

Importer	Product name		Symbol
ESEN Wojciech Michorzewski S.K.A. Papiezka 69, 87-800 Wloclawek, Poland info@skv.pl, www.skv.pl	DRIVESHAFT		40SKV163
	OE Number	Diagram No	Date
	8E0501203J	001	03/2025