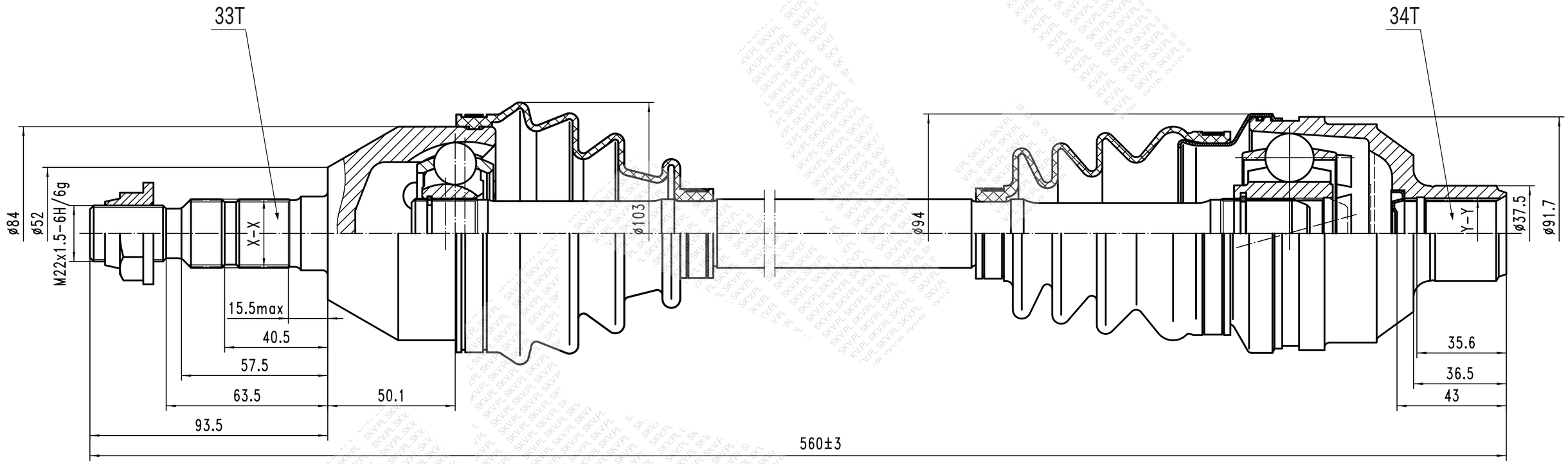


| Importer | Product name | | Symbol |
|---|---|---|---|
| ESEN Wojciech Michorzewski S.K.A.<br>Papiezka 69, 87-800 Wloclawek, Poland<br>info@skv.pl, www.skv.pl | DRIVESHAFT | | 40SKV246 |
| | OE Number | Diagram No | Date |
| | 0374544 | 001 | 03/2025 |